SAPIENZA
UNIVERSITÀ DI ROMA

Faculty of Information Engineering, Informatics and Statistics
Department of Computer Science

Advanced Architectures

Author:
Simone Lidonnici

13 march 2026

Contents

E Exercises **1**
E.1 Exercises on performance 1
E.1.1 Amdahl's Law 1
E.1.2 Gustafson Law 2
E.1.3 Processor Performance 2
E.1.4 Circuit area and time 3

E

Exercises

E.1 Exercises on performance

E.1.1 Amdahl's Law

Amdahl's Law

The Amdahl's law gives a bound on the speedup of a program that is enhanced (parallelized) based on the fraction of program that we can enhance α. We can calculate the time with the enhancement:

$$T_e = (1-\alpha)T + \alpha\frac{T}{S_e}$$

In which T_e is the time with the enhancement, S_e the speedup of the enhanced part and T the base program time. For parallelization with p process we can assume $S_e = p$. We can calculate the speedup as:

$$S = \frac{1}{(1-\alpha) + \frac{\alpha}{S_e}}$$

Another important metric is the efficiency with p processes:

$$E = \frac{S}{p} = \frac{1-\alpha}{p} + \alpha$$

Example:
We have a processor that does:

- 20% of the time FPSQR
- 50% of time FP

We have 2 option of enhancement:

1. Speedup FPSQR by 10 times
2. Speedup FP by 1.6 times

We calculate the speedup of the two options:

$$S_1 = \frac{1}{(1-0.2) + \frac{0.2}{10}} = \frac{1}{0.82} \simeq 1.22$$

$$S_2 = \frac{1}{(1-0.5) + \frac{0.5}{1.6} = \frac{1}{0.8125} \simeq 1.23}$$

So, the second one is slightly better.

E.1.2 Gustafson Law

Gustafson Law

The Gustafson Law uses the opposite approach in respect to the Amdahl law, so using enhanced time (parallelized) T_e with p processes, we can estimate the sequantial time based on the fraction of program that we can enhance α:

$$T = (1-\alpha)T_e + \alpha p T_e$$

The speedup can be calculated:

$$S = (1-\alpha) + \alpha p$$

Example:
We have a program that can be parallelized for 50% and we have two processors, one with 2 core and the other with 4. The speedup that the two processors can reach is:

$$S_1 = (1-0.5) + 2 \cdot 0.5 = 1.5 \implies E_1 = \frac{1.5}{2} = 0.75$$

$$S_2 = (1-0.5) + 4 \cdot 0.5 = 2.5 \implies E_2 = \frac{2.5}{4} = 0.625$$

So, with 4 cores we have more speedup but less efficiency.

E.1.3 Processor Performance

Processors uses clock cycles (CC) to run at costant rate. For a program we can calculate the CPU time for a program as:

$$CPU \text{ time} = CC \text{ program}/C \text{ rate} = CC \text{ program} \cdot C \text{ time}$$

We can count the number of instruction executed (IC) and knowing the CC per program we can calculate the CC per instruction (CPI):

$$CPI = C \text{ program}/IC$$

With the previous formulas we can redefine the CPU time as:

$$CPU \text{ time} = IC \cdot CP \cdot C \text{ time}$$

It is useful to also calculate the total clock cycle of a program considering the different types of instructions:

$$CC \text{ program} = \sum_{\forall i} IC_i \cdot CPI_i$$

In which i is a type of instruction.

If on a processor we decrease the CPI of a specific instruction, we can calculate the new CPI by subtracting the weighted difference:

$$CPI_e = CPI - \%instr(CPI_{old-instr} - CPI_{new-instr})$$

In which $\%instr$ is the fraction of the instruction enhanced, $CPI_{old-instr}$ is the CPI of that specific instruction before the enhancement and $CPI_{new-instr}$ after the enhancement.
Example:
We have a processor that does:

- 2% of the time FPSQR with 20 CPI
- 25% of time FP with 4 CPI
- Other instruction with 1.33 CPI

We have 2 option of enhancement:

1. Decrease the CPI of FPSQR to 2
2. Decrease the CPI of FP to 2.5

The starting CPI average is:

$$CPI_{old} = (4 \cdot 0.25) + (1.33 \cdot 0.75) = 2$$

The enchanced CPI and speedup are:

$$CPI_1 = 2 - 0.02(20 - 2) \simeq 1.64 \implies S_1 = \frac{2}{1.64} \simeq 1.22$$

$$CPI_2 = (2.5 \cdot 0.25) + (1.33 \cdot 0.75) \simeq 1.625 \implies S_2 = \frac{2}{1.625} \simeq 1.23$$

So, the second one is slightly better.

E.1.4 Circuit area and time

To approximate the time and area of a circuit we relwte them to the area and speed of the simplest gates. Each simple gate with 2 input count as 1 gate for area and 1 gate delay unit for time. The only exception is the xor gate which counts as 2 because is implemented with 2 basic gates.
To take in account the number of inputs of gates we count a m input gate as:

- Time: $\lceil \log m \rceil$ gates
- Area: $m - 1$ gates

From now on, we will define the gate unit for area as A and the gate delay unit for time as T.
Some simple adders have this costs:

1. Half adder:

- Time: 2T
- Area: 3A

2. Full adder:

   - Time: 4T
   - Area: 7A

3. Ripple-Carry adder with n bits:

   - Time: $4n$T
   - Area: $7n$T

Example:
We have 3 operands of 4 bits and we want to sum them using the Carry-Save Adder below:

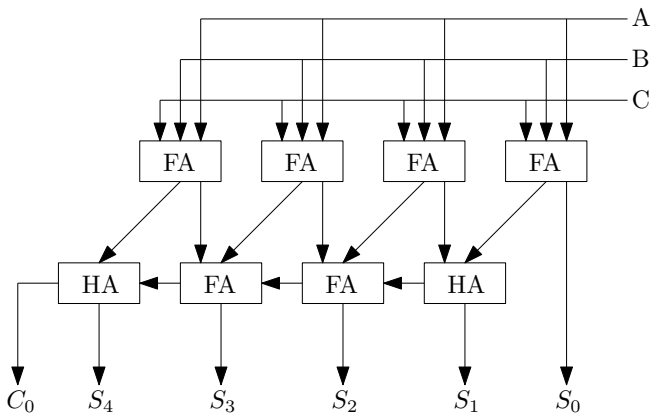

We can calculate the time and area of this adder in respect to the RCA for the same 3 4-bits operands:

1. Carry-Save Adder:

   - Time: FA + HA + 2FA + HA = 4 + 2 + 2·4 + 2 = 16T
   - Area: 6FA + 2HA = 6·7 + 2·3 = 48A

2. Ripple-Carry:

   - Time: 2RCA (4 bits) = 2·4·4 = 32T
   - Area: RCA (4bits) = 7·4 = 28A (we can reuse the same two times)

The speedup for both time and area is:

- Time: $\frac{32}{16} = 2$
- Area: $\frac{28}{48} \simeq 0.6$